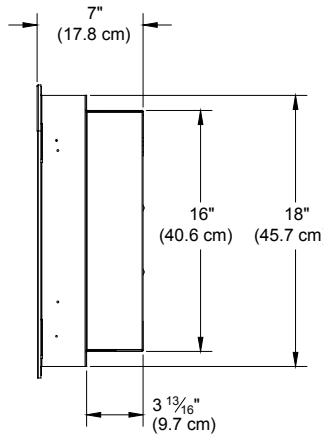
7"
(17.8 cm)
16"
(40.6 cm)
18"
(45.7 cm)
3 13/16"
(9.7 cm)

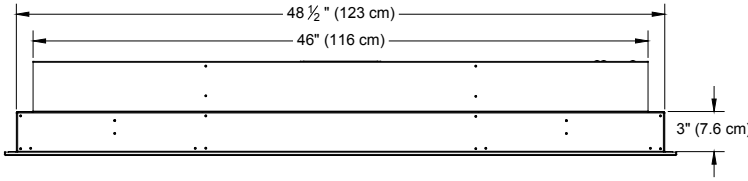
48 1/2 " (123 cm)
46" (116 cm)
3" (7.6 cm)

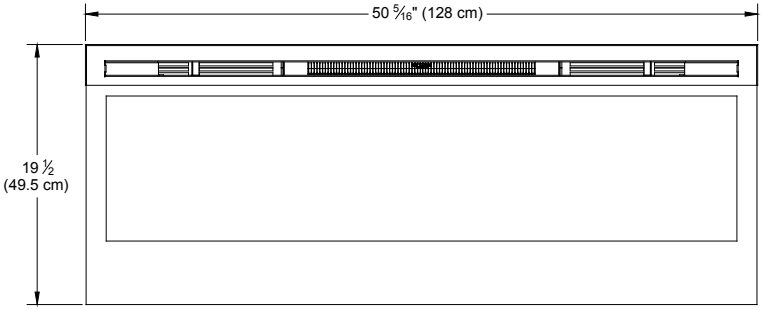
50 5/16" (128 cm)
19 1/2
(49.5 cm)